BUILDING
COMMON GROUND

MAX FRANK®

Stabox® F

Rebar connection system
with a coated metal water stop

Edition International

www.maxfrank.com

MAX FRANK®

BUILDING
COMMON GROUND

Stabox® F

Rebar connection system
with a coated metal water stop

Contents

Stabox® F

The Stabox® F rebar connection system provides an ideal solution for a strong connection of reinforced concrete elements with a concurrent sealing of the construction joint. Formwork monting at construction joints can be simplified and additionally the joint will be sealed with a galvanised and double-sided coated metal waterstop.

Application:
The monting of the Stabox® F is recommended for all reinforced concrete parts that have to be separated for structural reasons and be reassemled afterwards with requirements for tightness and transfer of forces.

- Reliable sealing of joints – confirmed by a official test institution in Germany (AbP)
- Less effort for formwork installation – no perforation of the formwork is necessary

Stabox® FD

Stabox® FB

Technical details steel:

- Rebendable steel, diameter 8 mm/10 mm/12 mm
- Steel quality B500B, (stainless steel upon request)
- Stirrup production according to DIN EN 1992-1-1 (NA) and DBV Leaflet – "Rebending of reinforcing steel and requirements of protective boxes according to Eurocode 2"
- Different forms of rebars (standard or special)
- 4 fixed stirrup widths (b = 10/12/17/20 cm)
- From stirrup width 16/20/24 cm (depending on the steel diameter and stirrup spacing) with Stabox® F D variable stirrup widths are also possible
- Recommended box lengths: 80 – 120 cm

Technical details metal waterstop:

- Double side coating
- Galvanised
- General test certificate (AbP)
- ETA (CE label)
- Resistant to many chemicals (technical data sheet – Fradiflex® metal waterstop)
- Waterproof up to 2 bar (20 m water head)
- Minimum 3 cm overlapping in each construction phase
- Overlapping sections of the waterstops 100 mm – pressing against each other or/and fixing with a clamp
- Proven utility for all grades of waterproofing and water table classifications

Stabox® F – Stirrup shape B, 2G, WWG

The double-shear Stabox® F rebend connection with a double-side coated metal waterstop and a steel box provides 3 different standard stirrup shapes. They enable a strong connection between 2 in-situ concrete elements, that have been produced in two different sections and concurrently the permanent sealing of the construction joint. The stirrup width has to be minimum 10 cm.

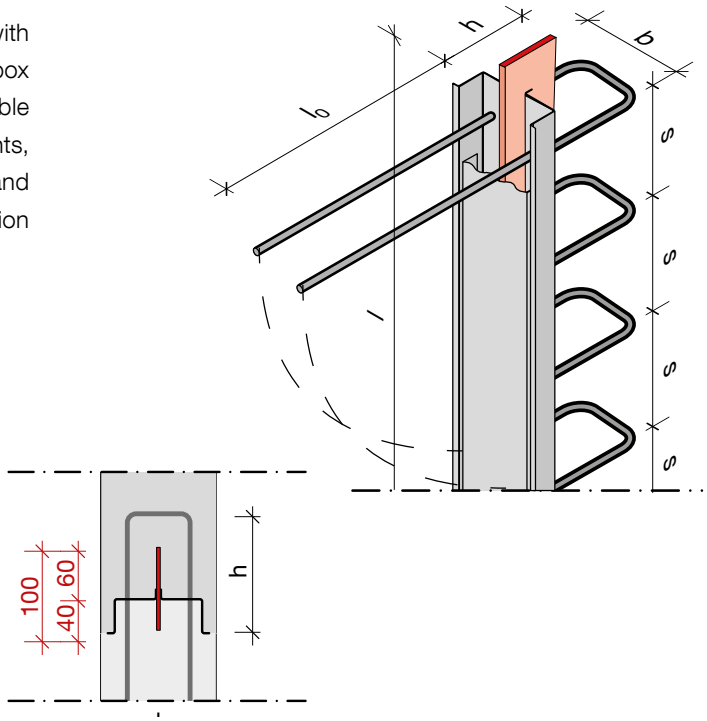

Type	Box width B [mm]	Stirrup width b [mm]	Steel diameter Ø [mm]	Lap length l_0 depending on steel diameter (Ø8/Ø10/Ø12) [mm]	Stirrup height h [mm]	Box length l [mm]	Box depth d [mm]	Stirrup spacing s [mm]
Standard stirrup dimensions								
12B	120	100	8 / 10	260 / 300	170	1200	40	150, 200
15B	140	120	8 / 10 / 12	260 / 300 / 390	170	1200	40	150, 200
19B	190	170	8 / 10 / 12	260 / 300 / 390	170	1200	40	100, 150, 200
22B	220	200	8 / 10 / 12	260 / 300 / 390	170	1200	40	100, 150, 200
Special stirrup dimensions								
12B	120	100	8	260 – 500	170*	800 – 1200	40 – ca. 50	150, 200, 240
			10	300 – 500				
15B	140	120	8	260 – 550	170*	800 – 1200	40 – ca. 50	100, 150, 200, 240
			10	300 – 550				
			12	390				
19B	190	170	8	260 – 550	170*	800 – 1200	40 – ca. 50	100, 150, 200, 240
			10	300 – 550				
			12	390 – 420				
22B	220	200	8	260 – 550	170*	800 – 1200	40 – ca. 50	10, 15, 20, 24
			10	300 – 550				
			12	390 – 550				

For special solutions please contact MAX FRANK products and service.
The listed maximum overlap length is only for selected box types.
* Minimum stirrup height for special solutions ≥ 120 mm.

Order code

Type FB

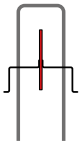

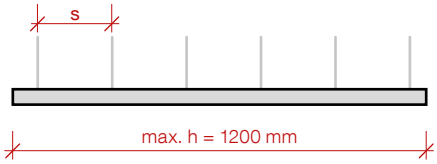

Example: Stabox® F

STAF – B – 12B – 8 / 150 – 1200, h=170 mm, l_0=460 mm

Product name	Stirrup shape	Type [mm]	Ø-Steel diameter [mm]	Stirrup spacing [mm]	Box length l [mm]	Stirrup height h [mm]	lap length l_0 [mm]
STAF	B	12B	8	150	1200	h=170	l_0=460
	2G	15B	10	100			
	WWG	19B	12	200			
		22B					

Stirrup shape overview

Typ B

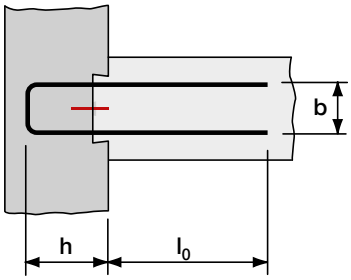

Typ WWG

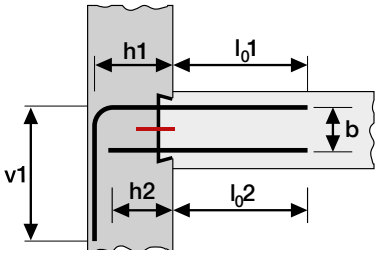

Typ 2G

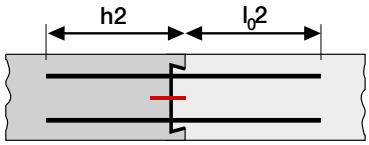

Stabox® F – Stirrup shape D

The double-shear Stabox® F type D rebend connection with variable stirrup width consists of two single boxes that are connected with an expanded metal mesh. The metal mesh integrates a double side coated metal water stop that seals the construction joint.

The stirrup width can be freely chosen in 1 cm steps.

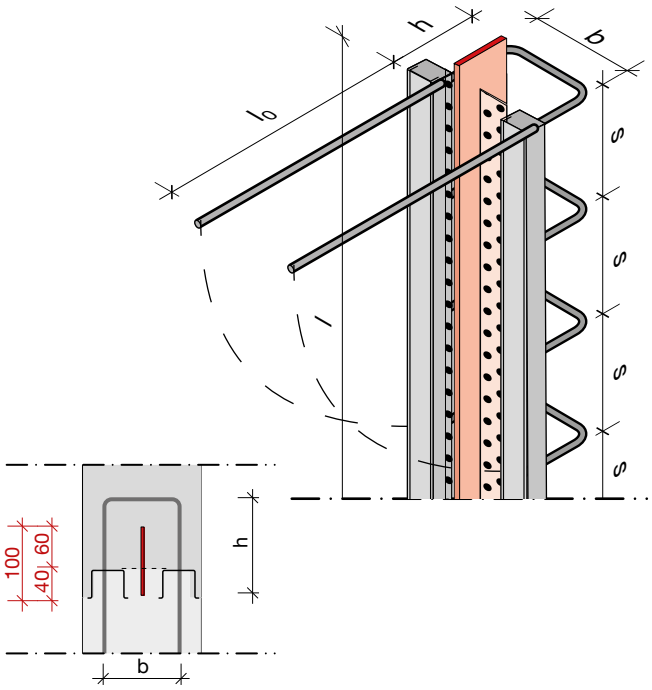

Type	Minimum stirrup width b [mm]	Maximum stirrup width b [mm]	Steel diameter Ø [mm]	Lap length l_0 depending on steel diameter (Ø8/Ø10/Ø12) [mm]	Stirrup height h [mm]	Box length l [mm]	Box depth d [mm]	Stirrup spacing s [mm]
5B	160	450	8	260 – 390	170*	800 – 1200	40 – ca. 50	100, 150, 200, 240
			10	300 – 390				150, 200, 240
7B	200	450	8	260 – 460	170*	800 – 1200	40 – ca. 50	100, 150, 200, 240
			10	300 – 460				100, 150, 200, 240
			12	390 – 460				150, 200, 240
9B	240	450	8	260 – 600	170*	800 – 1200	40 – ca. 50	100, 150, 200, 240
			10	300 – 520				100, 150, 200, 240
			12	390 – 460				100, 150, 200, 240
12B	300	450	8	260 – 600	170*	800 – 1200	40 – ca. 50	100, 150, 200, 240
			10	300 – 600				100, 150, 200, 240
			12	390 – 600				100, 150, 200, 240

For special solutions please contact MAX FRANK products and service.
* Minimum stirrup height for special solutions ≥ 120 mm.

Order code

Type FD

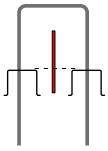

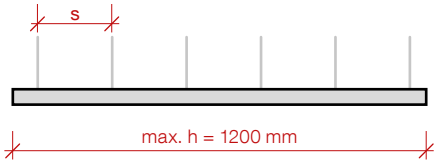

Example: Stabox® F

STAF – D – 160 – 8 / 150 – 1200, h=170 mm, l_0=460 mm

Product name	Stirrup shape	stirrup width b [mm]	Ø-Steel diameter [mm]	Stirrup spacing [mm]	Box length l [mm]	Stirrup height h [mm]	lap length l_0 [mm]
STAF	D	160	8	150	1200	h=170	l_0=460

Overlapping of reinforcement above the metal waterstop

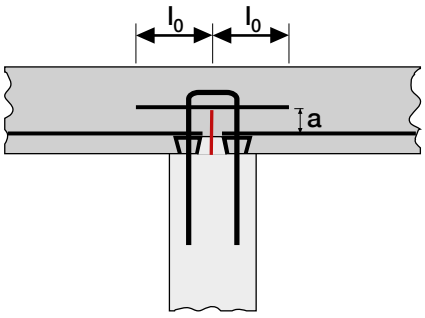

a) l_0 = required l_0
with a ≤ 5 cm or 4Ø

b) l_0 = required l_0 + Δx
with a ≥ 5 cm or 4Ø
and Δx ≥ a – 5 cm or 4Ø
required $l_0 = l_{b,rqd} \cdot \alpha_1 \cdot \alpha_2 \cdot \alpha_3 \cdot \alpha_4 \cdot \alpha_5 \cdot \alpha_6$
according to DIN EN 1992-1-1(NA)

Basis of calculation: e.g. Stabox® F - Type D

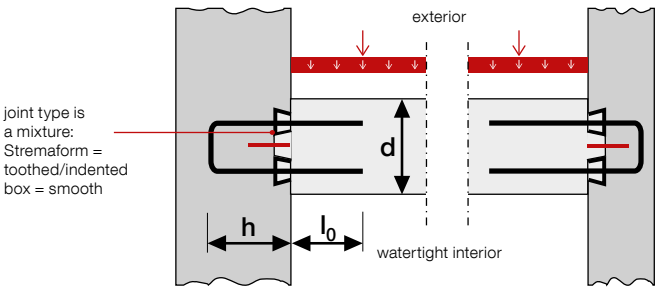

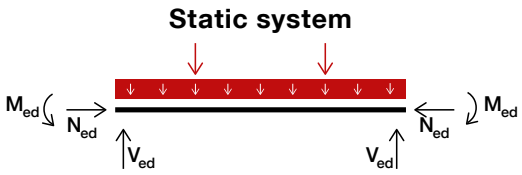

case: c – according to DBV leaflet "Rebending of reinforcing steel and requirements on protective boxes according to Eurocode 2"

1

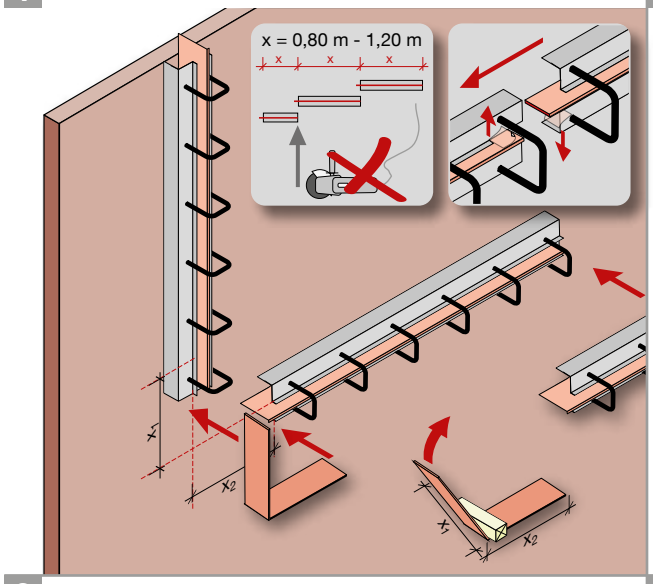

2

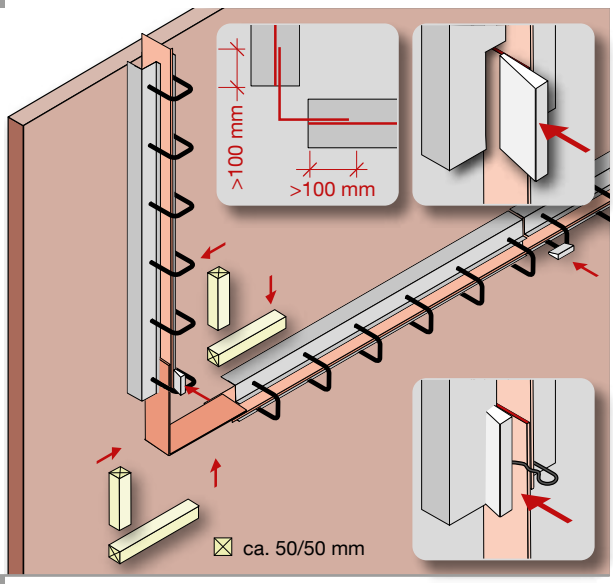

3

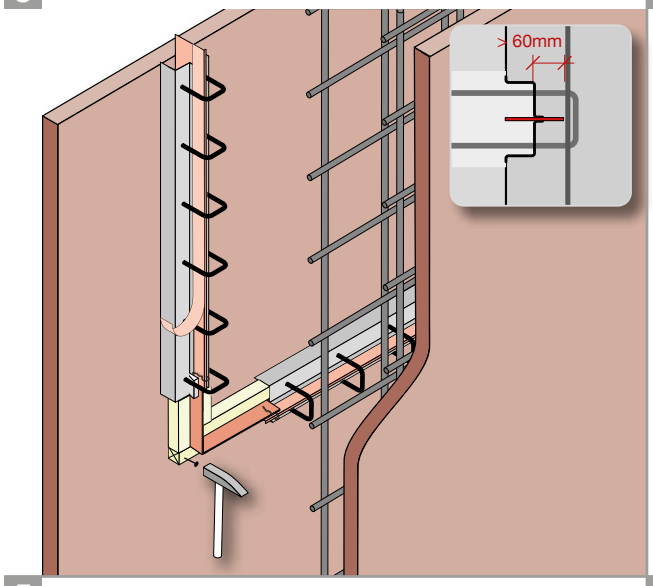

4

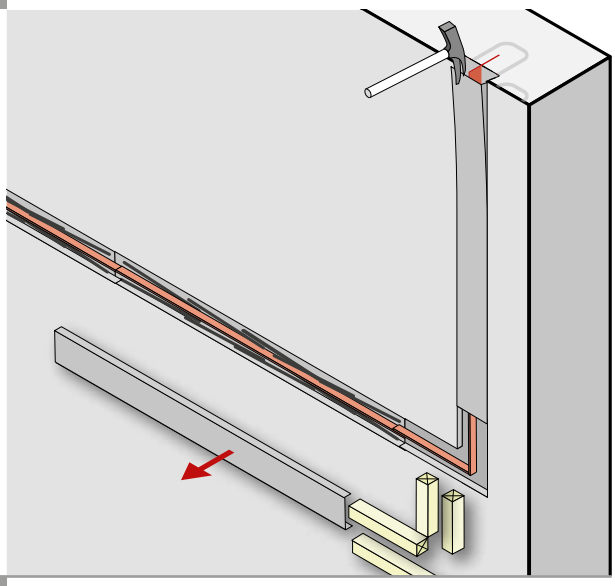

5

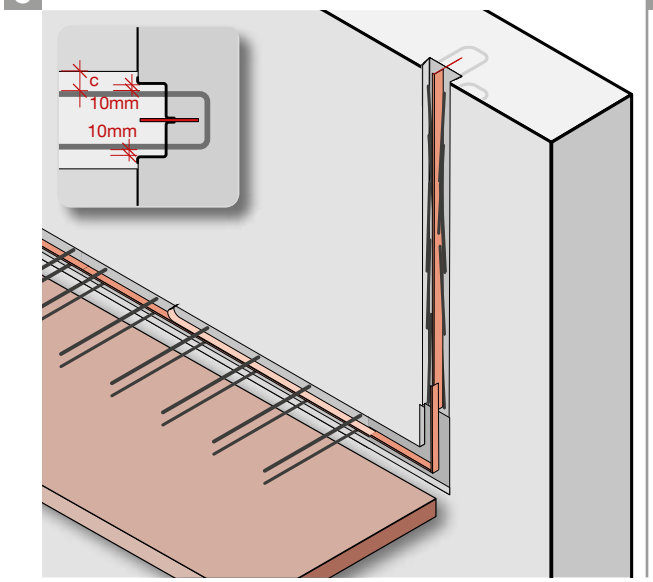

6

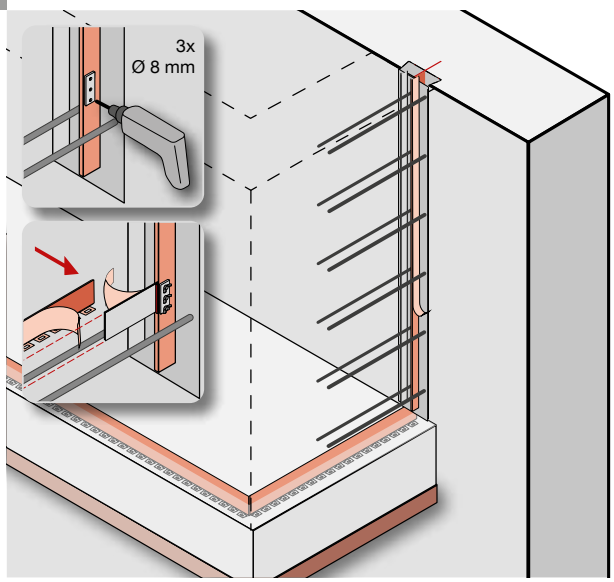

These installation instructions can only be regarded as a recommendation. They are no substitute for the specialised knowledge required for the installation. The instructions are always maintained at the latest state of the art and are constantly updated. We therefore expressly reserve the right to make technical changes, even without prior notice to the customer. The respectively valid version can be found on our homepage at **www.maxfrank.com**. In addition, our General Terms and Conditions of Sale apply.

Application guideline

The intended position for the Stabox® F elements has to be marked on the formwork. Elements have to be fixed with nails on the formwork – for metal formwork please use a suitable device (magnet holder).

Before monting of the next element please take the wedge out of the recess in the box and store it. Please remove the foil in the joint area of the metal water stops. Pay attention to the minimum overlap length of the two metal waterstops of 10 cm. The overlapping has to be secured with a clamp outside the box. Joint areas must be gapless. After monting the wedges have to be put again in the recesses of the boxes. The ribbon for transport and cover holding can be removed after the monting of the elements.

The element lengths should meet in total the joint length. A cutting of the boxes at the building site requires high accuracy. To avoid damages of the coated metal waterstop please order the elements in the needed lengths.

Before concreting the 1. section the first part of the foil has to be removed from the coated metal water stop. The foil on the coating in the 2. concreting section remains until just before concreting of this section.

The edges have to be formed of a standard Fradiflex® metal waterstop (width 120 mm). A wooden strip has to be attached on both sides of this edge element according to picture 2 and 3. Gaps between the metal water stop and the wooden strips have to be avoided.

The covers of the boxes and the wooden strips can be removed after concreting of the 1. section. The coated metal water stop must not be damaged!

For rebending of the steel please use a suitable tool according to respective standard (country specific). Now the wedge also can be removed. The box, the steel and the metal water stop remain in the concrete. The foil on the coating of the metal water stop has to be removed shortly before concreting of the 2. section.

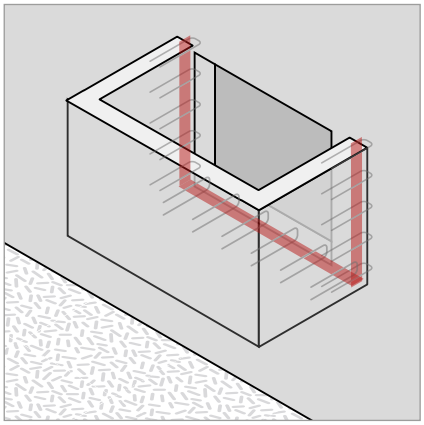

Light shaft connection

If the light shaft has to be concreted separately the Stabox® F rebend connection is useful.

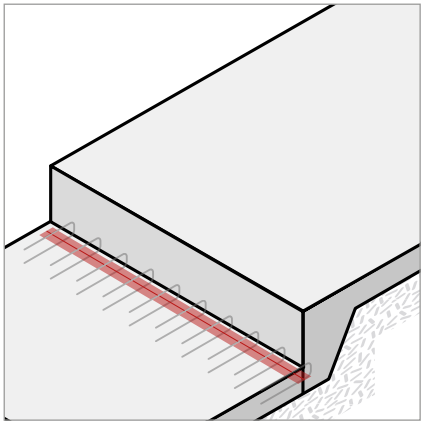

Ground slab; offset in height

With Stabox® F sealing and strong connection of the joint is ensured.

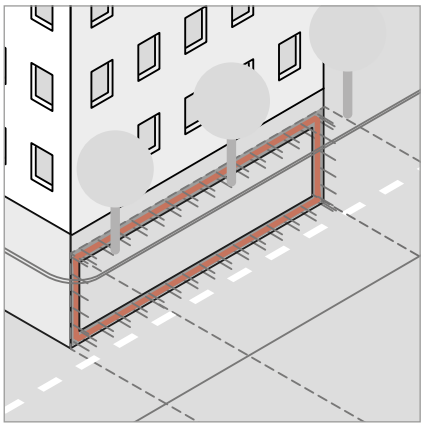

Underground parking

Bigger buildings have to be divided in serveral concreting sections. Above all in particularly restricted spaces (e.g. underground parking) the Stabox® F is a connection that is easy to apply and safe.

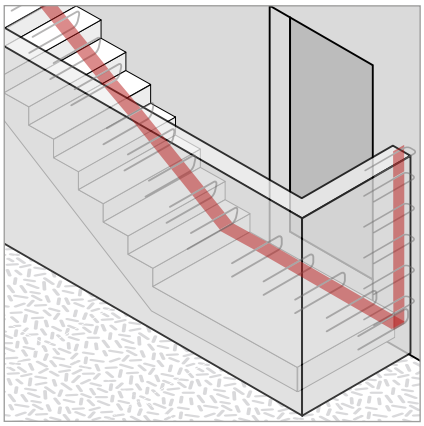

Basement stairway connection

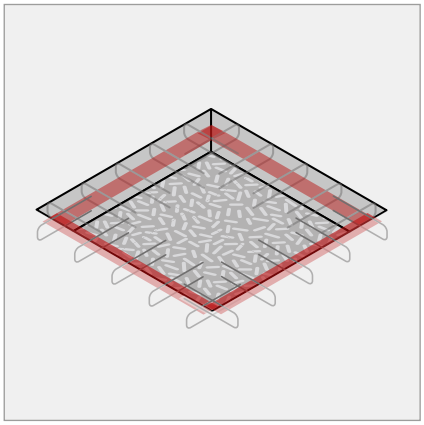

Sump/Bottom plate opening

For subsequent closings of openings in the bottom plate the required reinforcement overlap can be created with Stabox® F. The integrated coated metal water stop seals the joint efficiently.

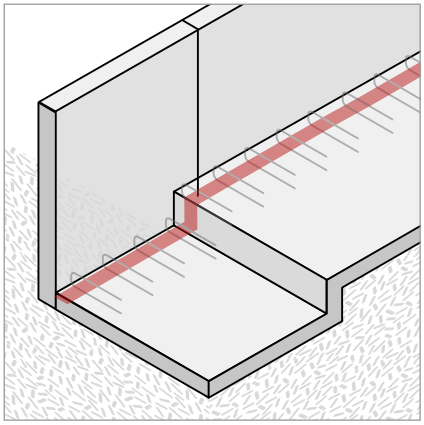

Susequent connections wall to slab

Accessories

Fradiflex® expansion joint connector

	Description	Description	Height mm	Packaging unit Pcs	Weight kg/packaging unit
	Fradiflex® expansion joint connection for connecting Fradiflex® Premium with waterstops	FFBDA08	80	2	0.60
		FFBDA15	150	2	1.20

Special sealing tape

	Description	Description	Width mm	Length m	Packaging unit Pcs	Weight kg/packaging unit
	Special sealing tape for securing joints and for repairs	YBUTYLKBA050	50	15.00	12	15.00
		YBUTYLKBA100	100	15.00	6	15.00

MAX FRANK®

BUILDING
COMMON GROUND

MAX FRANK Group
Headquarter:
Max Frank GmbH & Co. KG
Mitterweg 1
94339 Leiblfing
Germany

www.maxfrank.com

505BR04/07 - INTGB - 03/23